Parts List					
ITEM	QTY	PART No.	DESCRIPTION	MATERIAL	APPEARANCE
1	1	BC3234	Ø80 SP Rec J-Lock Interface Super Duplex	UNS S32750 / S32760	Xylan Coated Orange
2	1	BA1587	Ø80 SP Park Rec Vented Long-term	Assy of 2.1 to 2.2	N/A
2.1	1	BA1585	Ring for Ø80 Park Rec	S32750 SUPER DUPLEX	Bare Material
2.2	1	BA1583	Ø80 SP Park Rec	PEHD 1000	PEHD White
3	6	106048	M8x45 Socked Head Bolt DIN 912 Inconel 625	Inconel Alloy 625 UNS N06625	Bare Material

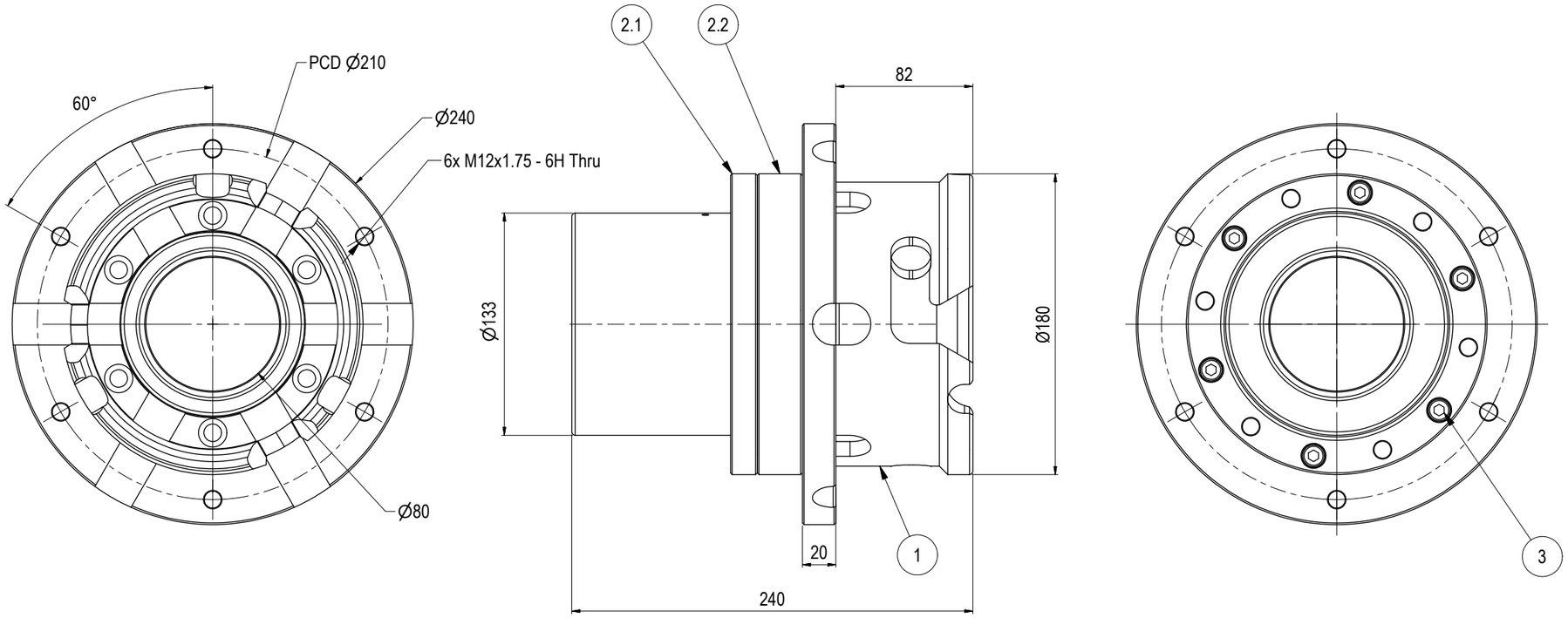

NOTE: 1
DESIGN CODE:
API 17H Type 4

NOTE: 2
TECHNICAL CLASSIFICATION:

Article Type:	001-Hot Stabs
Main Group:	1.05. Ø80 Hot Stab
Intermediate Group:	1.41.02. Receptacle
Sub Group:	1.41.100.01. Single

NOTE: 3
INTERFACE INFORMATION:

Pressure Rating Bar:	Vented
Material:	Long-term
Weight:	9,8 kg
Volume:	2,58 dm^3
Surface Area:	3870 cm^2
Hydraulic:	N/A
Mechanical:	N/A
Electrical:	N/A
Com. & Protocol:	N/A

NOTE 4
Electrical continuity to be measured after assermbled into structure. Max 0,1 Ohm

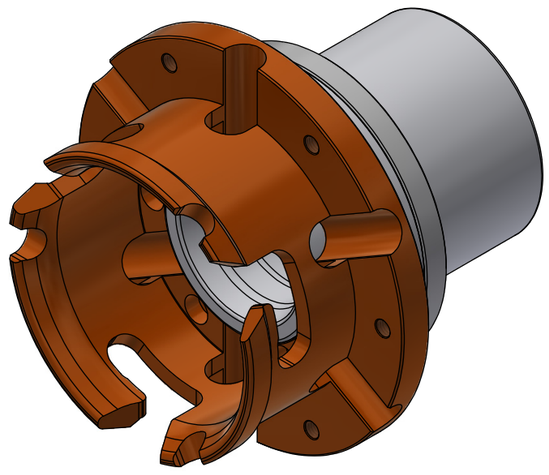

Rev.	Date	Reason for issue	Revision change	Made	Chk'd	Appr.
01	22.10.2025	9-IFU (Issued for Use)		HNJ	TAN	HNJ

BLUE LOGIC

This Drawing is the Property of Blue Logic AS © and must Not be Loaned, Reproduced or Transferred to others without written Permission

Dwg Scale: NTS
Dwg Proj:
Dwg Format: A3

Drawing title: Ø80 SP Park Rec Vented with J-Lock SD

Drawing number: BC3243

Rev. 01